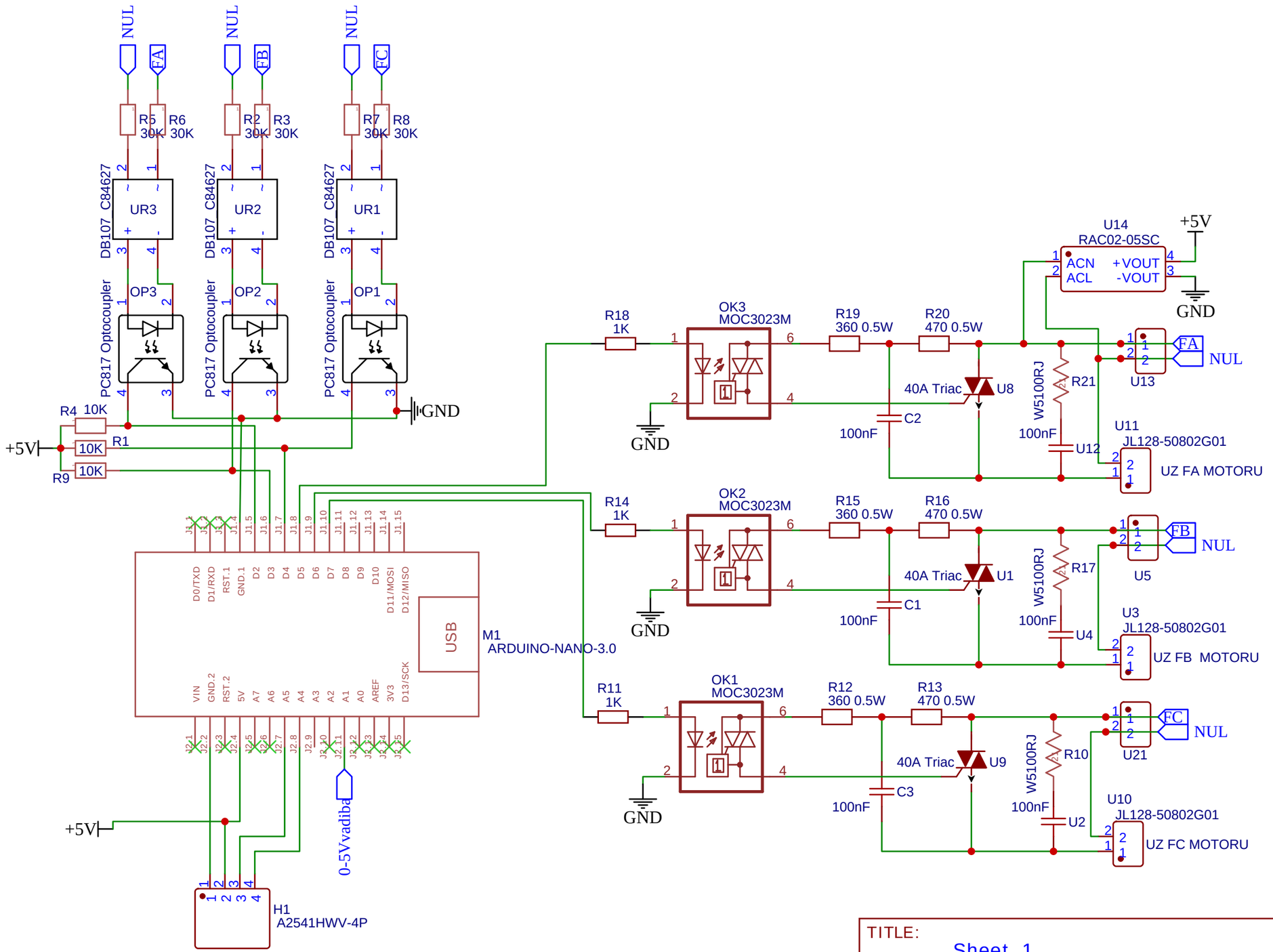


TITLE: Sheet_1

REV: 1.0

Company: [redacted]

Sheet: 1/1

Date: 2025-08-04

Drawn By: [redacted]