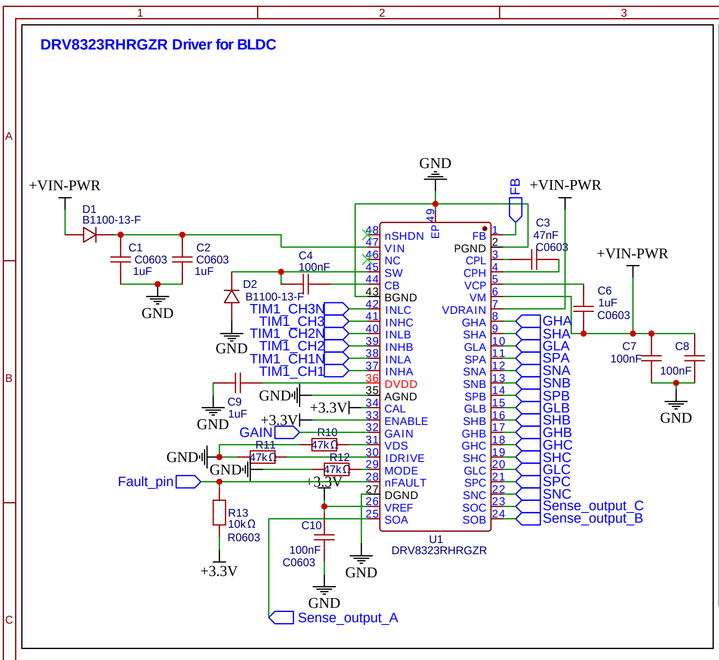

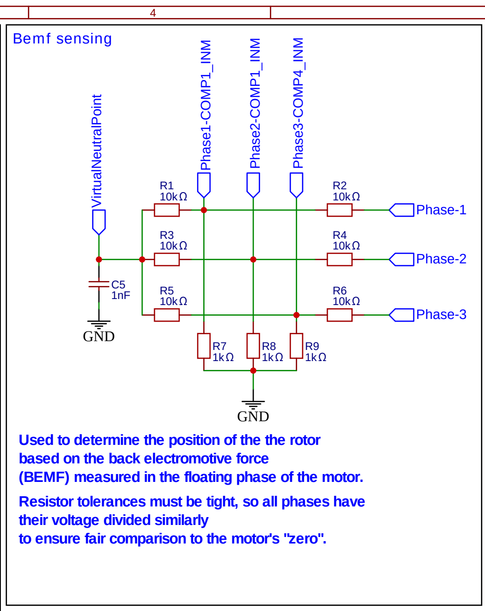

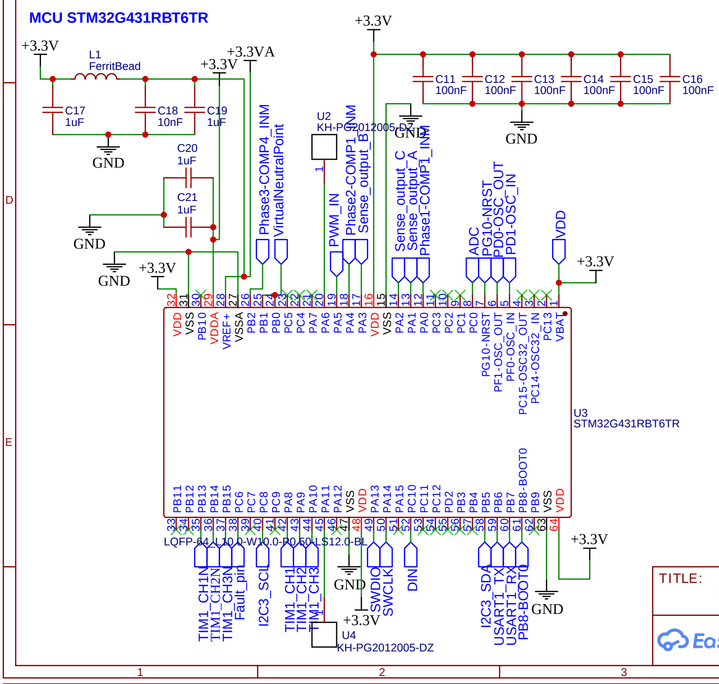

TITLE: Electronic speed controller		REV: 1.0
EasyEDA	Company: IUT LYON1	Sheet: 1/2
	Date: 2023-12-05 Drawn By: Nayel KHOUATRA	

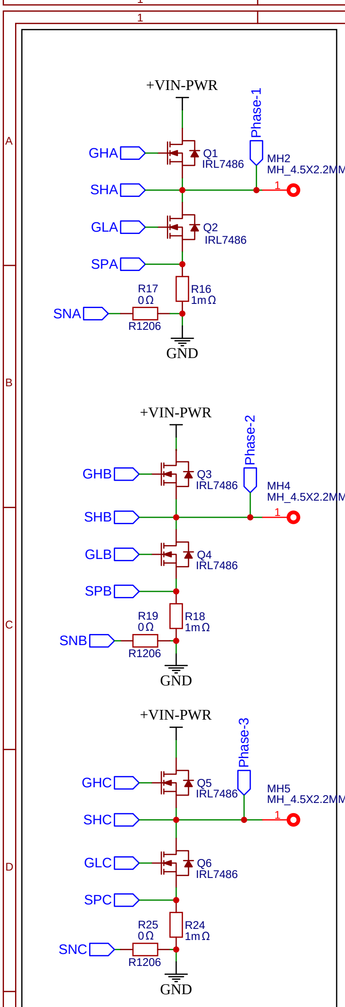

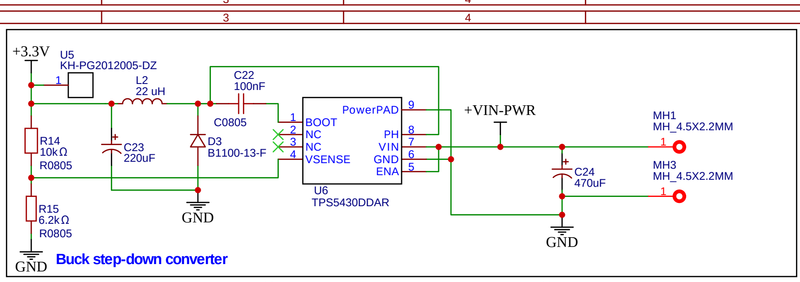

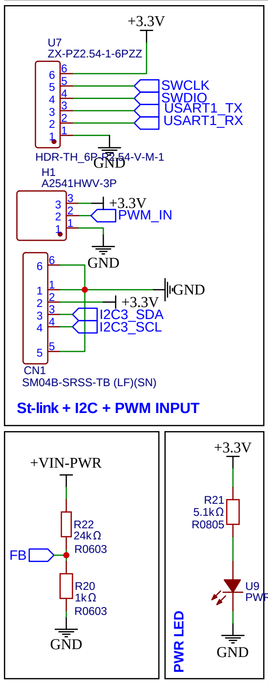

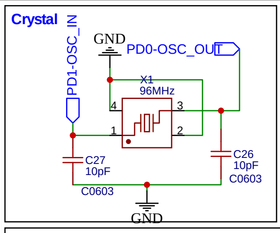

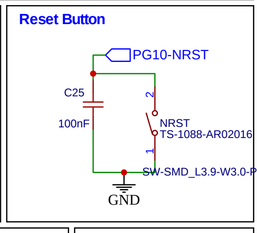

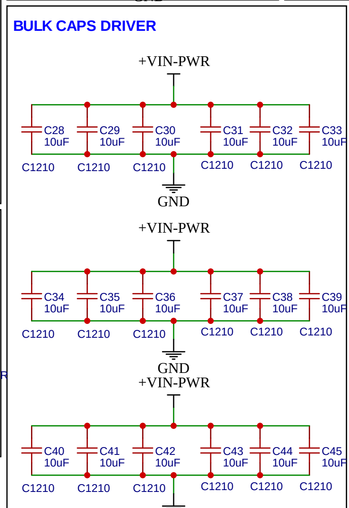

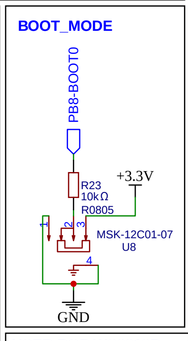

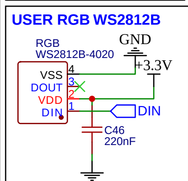

FB:
R23 must be between 1KOhm and 100KOhm,
So R23 is set to 1KOhm
The voltage feedback (VF) is 0.765V,
so R23*(V0/VF)-1 = 24 KOhm
VO = 18.4V

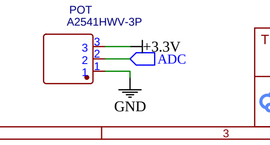

TITLE: Electronic speed controller		REV: 1.0
EasyEDA	Company: IUT LYON1	Sheet: 2/2
	Date: 2023-12-05 Drawn By: Nayel KHOUATRA	